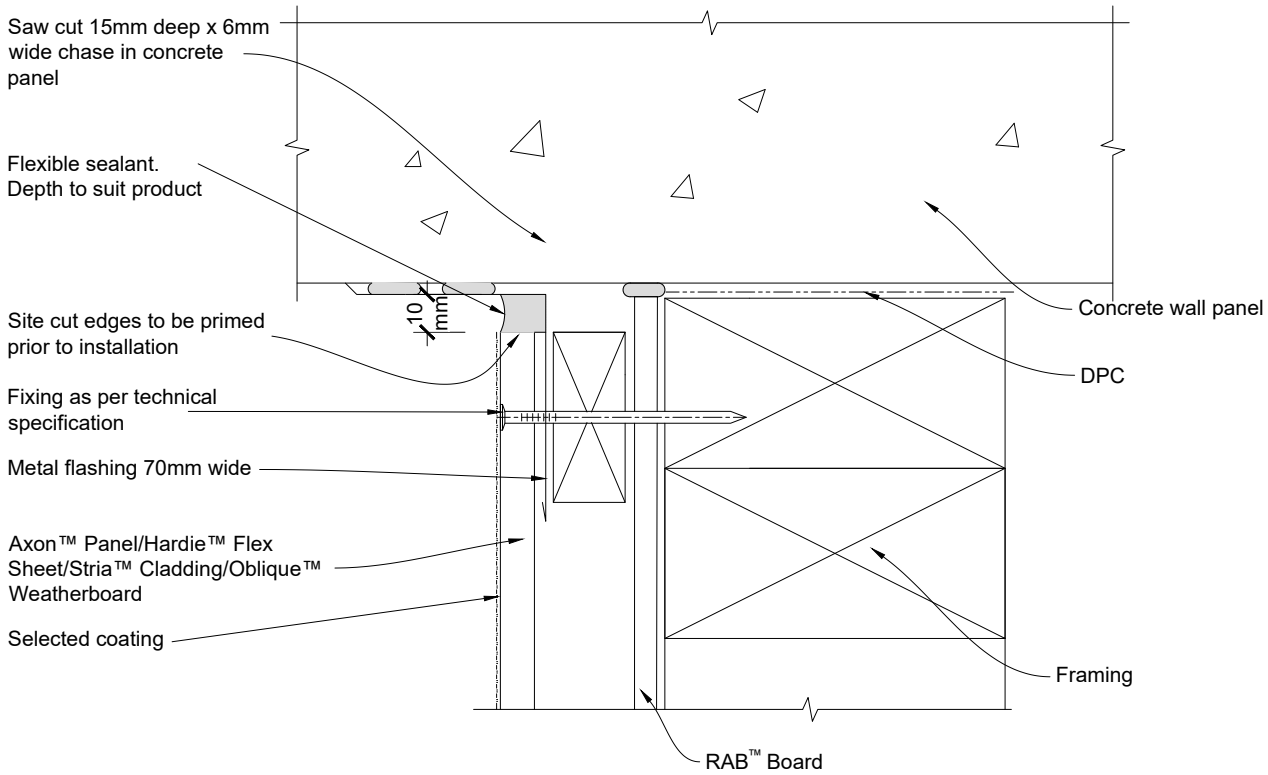

JamesHardie™
www.jameshardie.co.nz

Cladding Junction Detail

INTERNAL CORNER JUNCTION BETWEEN CONCRETE WALL AND AXON™ PANEL/HARDIE™ FLEX SHEET/STRIA™ CLADDING/OBLIQUE™ WEATHERBOARD OVER RAB™ BOARD

www.jameshardie.co.nz
CAD Scale 1:2

FIGURE: 52